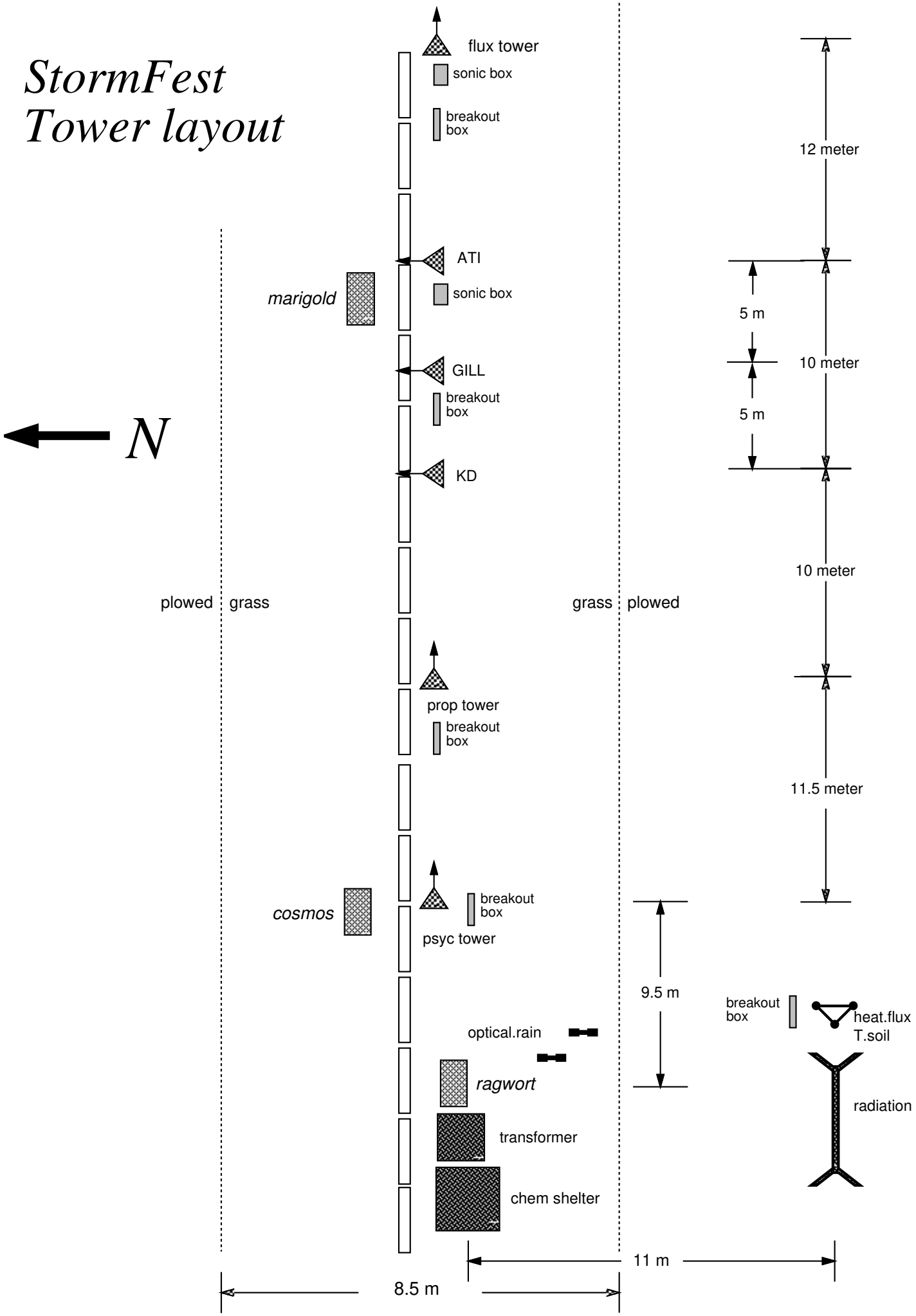StormFest Tower layout